Lansinoh®

NaturalWave® Double Electric Breast Pump

INSTRUCTIONS FOR USE

Intended Use of Breast Pump

The Lansinoh® NaturalWave® Double Electric Breast Pump is intended to express and collect the breastmilk of a nursing woman for the purpose of feeding collected breastmilk to a baby. The NaturalWave® Pump is intended for a single user.

Indications of Breast Pump

Lansinoh® NaturalWave® Double Electric Breast Pumps are indicated to elimination of clinical situations such as milk stasis in the breast, engorgement, and mastitis caused by insufficient milk discharge, relieve sore and cracked nipples, and to bring out flat or inverted nipples. Also, the NaturalWave® Pump enables mothers to provide breast milk for babies who cannot feed directly at the breast for a variety of reasons, such as latch-on problems, premature or unwell babies.

Contraindication of Breast Pump

There are no known contraindications.

Important Safeguards

The Lansinoh® NaturalWave® Double Electric Breast Pump is a personal care item and for hygienic reasons should never be shared between mothers or resold from one mother to another. Either of these actions will void the warranty.

If you are a mother who is infected with Hepatitis B, Hepatitis C or Human Immunodeficiency Virus (HIV), pumping breastmilk using the NaturalWave Pump will not reduce or remove the risk of transmitting the virus to your baby through your breastmilk.

When using electrical products, especially when children are present, basic safety precautions should always be maintained, including the following:

Read All Instructions Before Using

Danger: To reduce the risk of electrocution:

- Always unplug this product immediately after using.
- Do not use while bathing.
- Do not place or store this product where it can fall or be pulled into a tub or sink.
- Do not place or drop pump into water or other liquid.
- Do not reach for an electrical product that has fallen into water.
- Unplug immediately.

Warning: To reduce the risk of burns, electrocution, fire, or injury to persons:

- This product should never be left unattended when plugged in.
- Close supervision is necessary when this product is used near children.
- Use this product only for its intended use as described in this manual. Do not use attachments not recommended by the manufacturer.
- Never operate this product if it has a damaged cord or plug, if it is not working properly, if it has been dropped or damaged, or dropped into water.
- Keep the cord away from heated surfaces.
- Never use while sleeping or drowsy.

- Never drop or insert any object into any opening or tubing.
- Do not use this product if it is broken or any parts are missing.
- Do not allow small children or pets to play with the pump unit, USB A to C cable, etc.
- Do not use outdoors with the USB A to C cable or operate where aerosol spray products are being used or where oxygen is being administered.

Save These Instructions along with your receipt for future reference.

Congratulations!

Your decision to provide your baby with breastmilk, even if you need to be apart, is one of the most precious gifts you can give your baby. The Lansinoh® NaturalWave® Double Electric Breast Pump is a safe, efficient, and effective choice for moms who need to pump regularly.

Contents

Page

1. Quick Start Guide 3
2. Parts Diagrams 8
   - 2.1 Basic Controls, Display and Features
   - 2.2 Pump Parts
3. Cleaning Instructions 10
   - 3.1 Before First Use of Breastmilk Expression Set
   - 3.2 Cleaning of Breastmilk Expression Set
   - 3.3 Before Each Use of Breastmilk Expression Set
4. Assembly 11
   - 4.1 Assembling the Breastmilk Expression Set
   - 4.2 Connecting the Breastmilk Expression Set
   - 4.3 Connecting for Single Pumping
   - 4.4 Adding Silicone Flange Inserts
5. Using the Lansinoh NaturalWave® Double Electric Breast Pump 14
   - 5.1 2-Phase Technology
   - 5.2 Customization for Comfort and Efficiency
   - 5.3 Night light
   - 5.4 Completing your Pumping Session
6. Troubleshooting 16
7. Breastmilk Storage Guidelines 17
8. Technical Data 18
9. Warranty 20
10. Declaration for Electromagnetic Compatibility (EMC) 21

PLEASE DO NOT RETURN THIS PUMP TO THE RETAILER.

Lansinoh's dedicated Customer Service team is here to help.

If you experience any issues with your NaturalWave pump please call **1-800-292-4794** or email **customerservice@lansinoh.com**.

1. Quick Start Guide

Do NOT wash or disinfect tubing

Before first use, sanitize all parts that will come into contact with milk according to instruction in section 3, pages 10.

Please carefully read all instructions prior to use

Assembly

See detailed instruction on pgs 11-13. Proper assembly is essential to ensure proper function and suction.

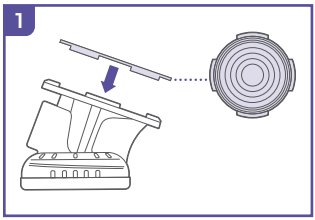

Insert purple diaphragm with the feet down

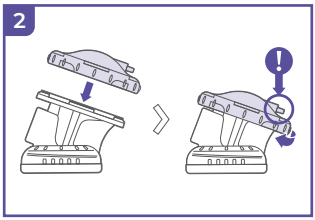

Attach clear cover and twist so tubing connector faces back

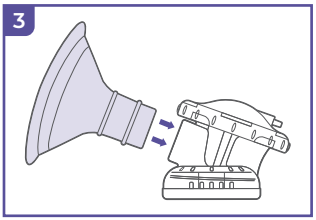

Attach flange

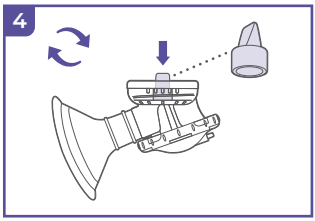

Insert valve

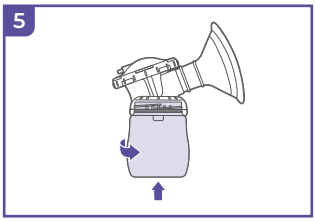

Attach bottle

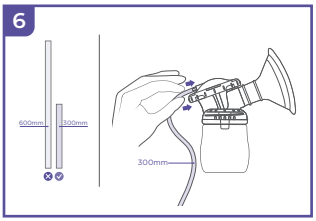

Attach tubing

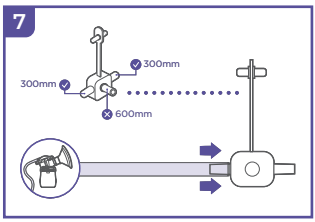

Secure Y connector

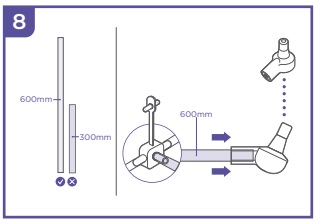

Secure connector

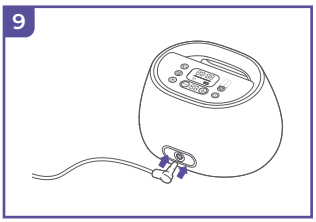

Attach to pump base

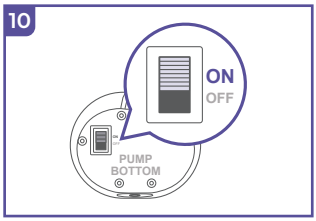

Connect pump to power using USB A to C cable and wall adapter (not included). The switch on the bottom of the pump must be turned on before use.

Getting Started

Hold Breastmilk Expression Set to your breasts so that the nipple is aligned to extend straight toward the nipple tunnel of the breast flange, ensuring there are no gaps for air to enter. Make sure set is tilted slightly downward to allow milk to flow into bottles.

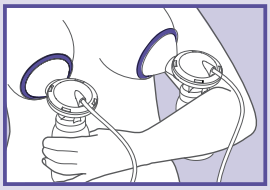

Charging the Battery for Cord-Free Pumping

The NaturalWave® Double Electric Breast Pump has a built-in rechargeable battery for cord-free pumping. Before your first pumping session, the battery needs to be charged.

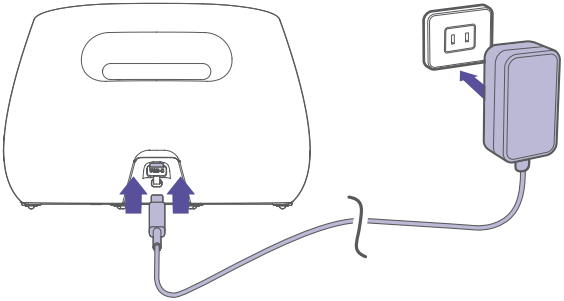

1. Insert the USB - C end of the adaptor into the pump, and the USB-A end into a USB wall adaptor (not included.)
2. The LED screen will display the battery icon flashing to indicate charging in progress.
3. Leave the NaturalWave® Pump plugged-in and charging for a minimum of 3 hours before using it for cord-free pumping. The battery icon on the screen will show 4 bars when the pump is turned on and fully charged.

Tip! To maintain the performance of your NaturalWave Pump, store and use the pump in environments ranging from 32F to 95F.

Tip! Recommend using 5V 2A USB-C UL or similar accredited charging adapter for best charging performance.

Tip! Make sure to turn on the switch on the bottom of your NaturalWave® Pump to activate it before your first session.

2-Phase Technology with Let-Down and Expression

Hold the power button down to start the pump in let-down phase. Let-down phase will run automatically for two minutes.

The expression phase has 3 pumping styles to choose from to mimic baby's natural feeding patterns. To begin expression phase sooner, press the Expression Phase and Pumping Style button. Press the Let-Down Phase button again at any point to switch back to let-down phase.

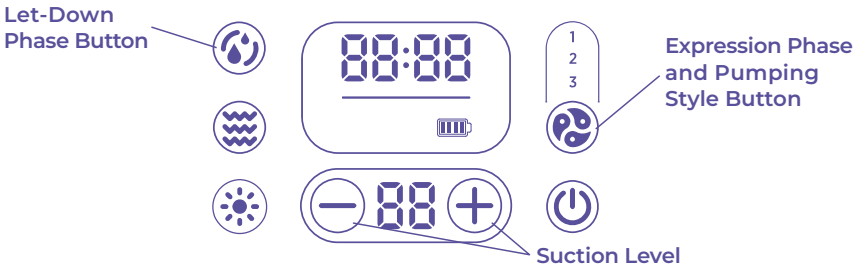

Customization for Comfort and Efficiency

Pumping Style Selection

Every baby feeds differently. The NaturalWave® Pump offers three different pumping styles, allowing you to choose the option that is most like your baby's feeding pattern. Change the pumping style by pressing the Expression Phase and Pumping Style button to find the one that works best for you.

Adjusting Suction Levels

There are 12 levels of suction strength on each pumping phase. Increase or decrease the suction to the level that you find comfortable.

Increase suction by pressing the button.

Decrease suction by pressing the button.

NaturalWave® Technology

Using the NaturalWave® Technology

Press the button to start using the NaturalWave® Technology within your normal pumping routine to encourage another let-down. NaturalWave® Technology mimics baby's tongue movements when breastfeeding with fluttering vibrations. While using NaturalWave® Technology, you can adjust your suction level using the + or − buttons. Press the Expression Phase and Pumping Style buttons to switch back to your pumping style.

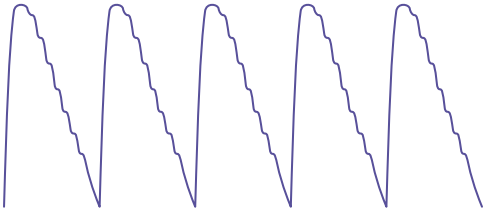

Pump cycle while using NaturalWave® Technology. Fluttering vibrations at the end of each cycle mimics baby's tongue while latched to the breast and feeding.

Pumping Tips

These pumping techniques harness NaturalWave® Technology – gentle vibrations that mimic a baby's tongue – to boost comfort and help you express more milk.

Power Pumping

Power pumping helps your body produce more milk by rapidly emptying your breasts, similar to cluster feeding (when baby nurses frequently to signal your body to increase supply). It is not meant to replace your normal routine, but to enhance milk supply within it.

Step-by-step:

Find one uninterrupted hour in your day. Follow this pattern:

1. Pump for 20 minutes with your normal pump settings, then rest for 10 minutes.
2. Switch to NaturalWave® Phase at a low suction level for 10 minutes (it's okay if little or no milk flows), then rest for 10 minutes.
3. Pump for another 10 minutes in NaturalWave® Phase at a low suction level.

Throughout the rest of the day, continue your usual pumping schedule (for example, pump for 15 minutes every 3 hours).

Mini Power Pump (Mid-Session Boost)

This technique uses gentle vibrations to mimic a baby's tongue and encourage more let-downs, helping boost milk supply.

Step-by-step:

1. Start pumping as usual.
2. Mid-way through your normal session, switch to NaturalWave® Phase at a low suction level for 10 minutes (it's okay if little or no milk flows).
3. Return to Expression Phase at your preferred suction level for 10 minutes.
4. Switch back to NaturalWave® Phase (low suction) for 10 minutes.
5. Finish with 10 minutes in Expression Phase.

Tip: Results may take 2–4 days. Stick with it daily for a week to notice an increase.

Make Pumping More Comfortable

You can replace Expression Phase with NaturalWave® Phase at any time for a gentler, more comfortable experience.

Step-by-step:

1. Begin pumping as usual.
2. Once milk is flowing, switch to NaturalWave® Phase and adjust suction for comfort.
3. Use NaturalWave® Phase for the entire session, or alternate with Expression Phase as you prefer.

Trigger More Let-Downs & Finish Strong

When milk flow slows down, or when you want to ensure your breasts are fully emptied, this technique helps mimic a baby's gentle, flutter-like sucking.

Step-by-step:

1. Start pumping as usual.
2. When milk flow begins to slow (usually after 5–10 minutes), switch to NaturalWave® Phase at a slightly lower suction level.
3. Pump for 3–5 minutes in this mode to mimic gentle baby sucking.
4. If no more milk flows, your session is likely complete.

Scan to view instructions in Spanish and how-to guides to help you on your pumping journey. Plus, special discounts on our bestselling products and insider content with expert tips.

2. Parts Diagrams

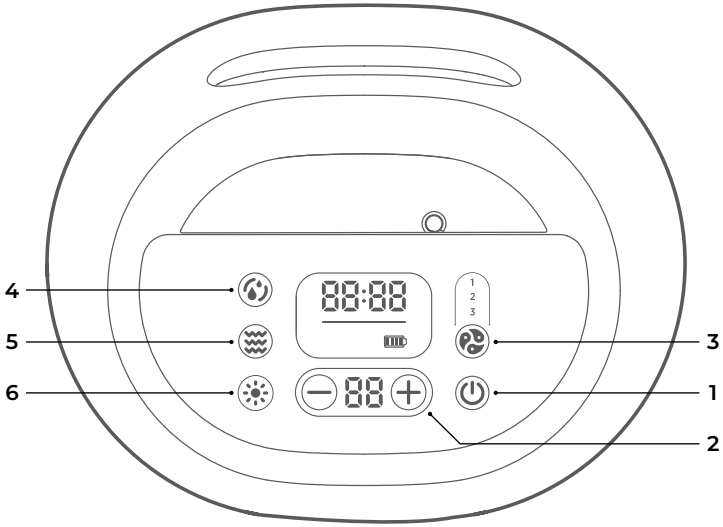

2.1 Basic Controls, Display and Features

1. Power, On/Off/Pause button
2. Suction level display, increase, decrease
3. Expression Phase and Pumping Style button
4. Let-Down Phase button
5. NaturalWave® Technology button
6. Night light brightness level button
7. Pumping session timer
8. Rechargeable battery power indicator

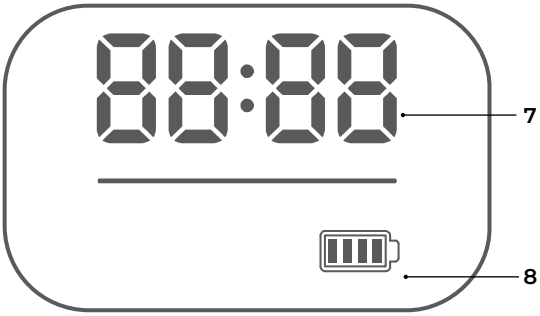

2.2 NaturalWave® Breast Pump Parts

Item	Item Number
A. NaturalWave® Tubing	#53458
A1 Silicone Tubes 300 mm (2)	
A2 Silicone Tube 600 mm	
A3 Tubing Y Connector	#53405
A4 Pump Connector	#53453
B. Breastmilk Expression Set Includes:	
B1 ComfortFit® Breast Flange 25mm (2)	#53408
ComfortFit® Breast Flange 28mm (2)	#53511
B2 Breast Flange Body (2)	#53454
B3 Diaphragm (2)	#53402
B4 Diaphragm Cap (2)	#53410
B5 White Valve (4)	#53400
B6 Lansinoh® Wide-Neck Bottle 5 oz (2)	#53451
B7 Silicone Flange Insert 21mm (2)	#53553
Silicone Flange Insert 19mm (2)	#53552
Silicone Flange Insert 17mm (2)	
C. Lansinoh® Bottle Storage Lids (2)	#53450
D. USB C to A Charging Cords (1)	
E. NaturalWave® Slow Flow Nipple, Collar, and Cap	

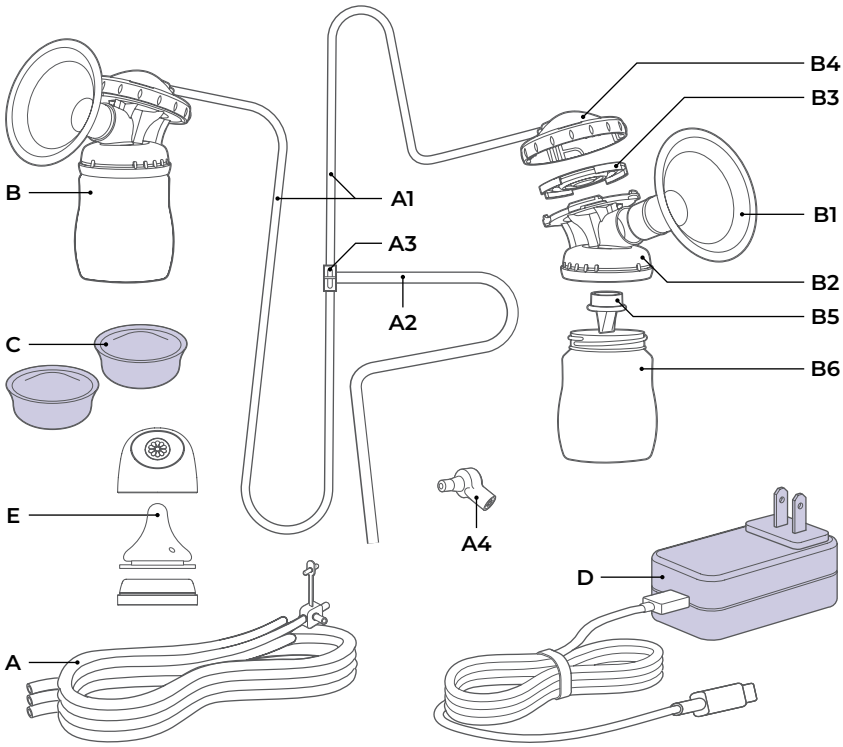

3. Cleaning Instructions

Unless otherwise instructed by your healthcare provider, follow these disinfecting and cleaning instructions.

3.1 Before First Use of Breastmilk Expression Set

- Prior to using the set for the first time, disassemble and boil all parts of the Breastmilk Expression Set that come into contact with breastmilk for 5 minutes.
- Cover the parts with water, making sure there is room for all the parts to be submerged in water in the pot while boiling.
- Do not boil the tubing and tubing connector. The NaturalWave® Pump is a hygienic, closed system design, which ensures breastmilk will not enter the tubing or motor.
- Remove all parts from water immediately after boiling, using caution as parts will be hot.
- Completely air dry before assembly and use. Partially dried parts may affect operation of the pump. Please ensure parts are completely dry before use.

3.2 Cleaning of Breastmilk Expression Set

- Set aside the tubing and tubing connector.
- The breast flange and bottles may be cleaned in the upper rack of your dishwasher or hand washed with dish soap in hot water. For best results, we recommend using a baby bottle brush to clean the bottle and a baby nipple brush to clean the insides of the breast flange. DO NOT use solvents or abrasives. Rinse with hot, clean water.
- All other parts of the Breastmilk Expression Set should be hand washed to prevent loss and to extend their usefulness.
- To clean your breast pump base, wipe with a damp cloth, using only water or mild soap.

3.3 Before Each Use of Breastmilk Expression Set

- Always wash hands thoroughly with soap and water before handling the Breastmilk Expression Set, the pump body, or other attachments.
- Ensure that the tubing is free of any liquid or moisture. Do not operate the pump if liquid or moisture is visible in the tubing.
- Ensure diaphragms are completely dry before use.
- Before each use, visually inspect the individual components for cracks, chips, tears, discoloration or deterioration, as this may affect the functionality of the Breastmilk Expression Set. Please visit **Lansinoh.com** or call **1-800-292-4794** for further guidance and replacement parts.

WARNING: It is highly recommended not to use any method other than the above mentioned cleaning methods.

WARNING: Use caution when cleaning the small white valve. It is important for proper suction. Do not use excessive force and do not clean with a baby bottle brush or a nipple brush. Gently wash by hand in hot, soapy water and rinse under hot running water.

To use steam or microwave sterilizers: Follow the manufacturers instructions. Ensure all openings are face down in the sterilizer. Ensure you wash your hands before removing equipment from the sterilizer. Tubing and tubing connector should not be sterilized.

4. Assembly

4.1 Assembling the Breastmilk Expression Set

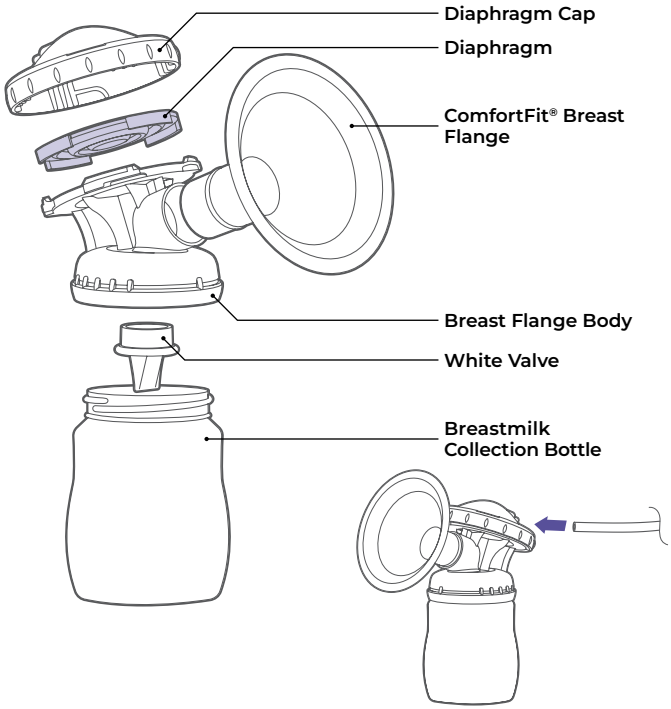

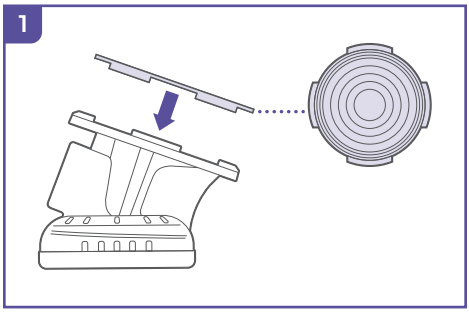

Place purple silicone diaphragm, the feet down, on the top of flange body. Ensure diaphragm fits securely between rims of breast flange body.

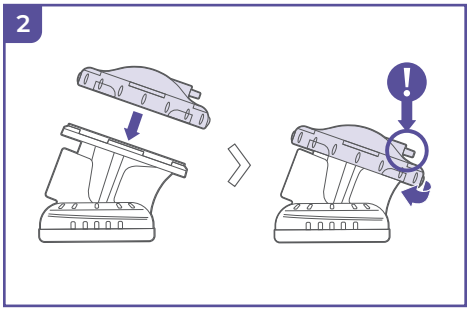

Place clear diaphragm cap over breast flange body and twist to secure so that the tubing portal is facing the back of the pump.

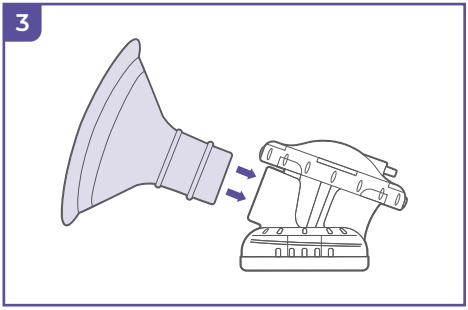

Firmly push ComfortFit® Flange into breast flange body.

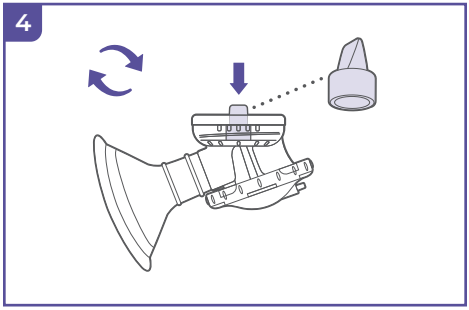

Holding the base of the white valve, gently secure the valve into the bottom of the breast flange body.

NOTE: Use care when handling and cleaning the small white valve.

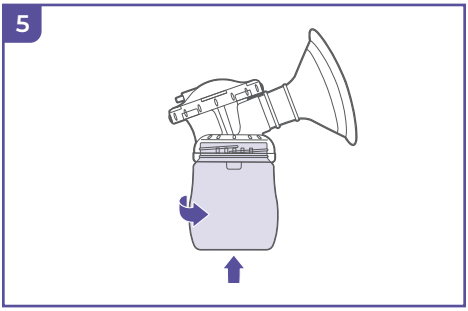

Screw collection bottle onto breast flange body.

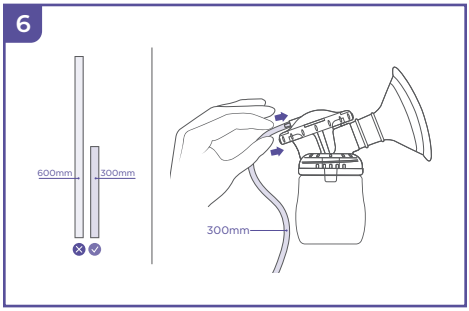

Attach end of 300 mm tubing to back of diaphragm cap. Ensure that tubing is pushed all the way to the base of the attachment port and completely covers it.

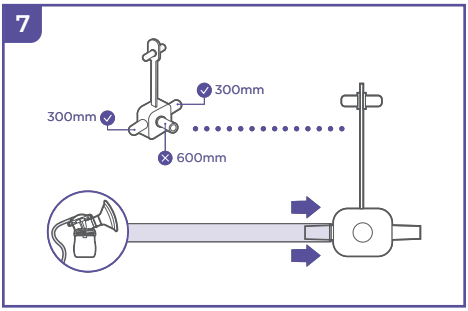

Attach other end of 300 mm tubing to Tubing Y Connector.

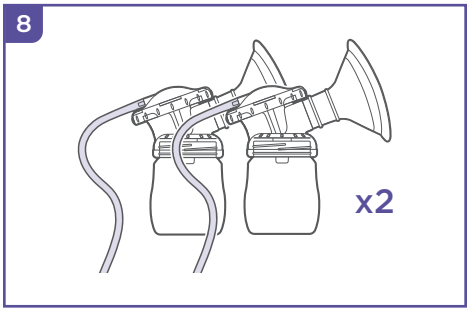

Repeat assembly process for second breast flange body.

4.2 Connecting the Breastmilk Expression Set

Once Breastmilk Expression Set is assembled, connect to pump base:

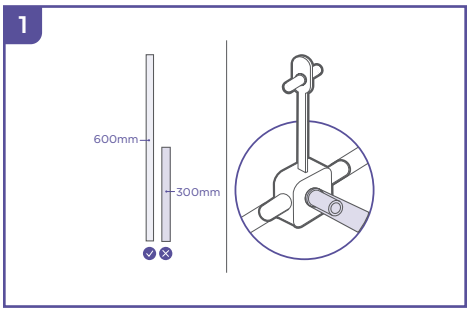

Secure one end of 600 mm tubing to Tubing Y Connector.

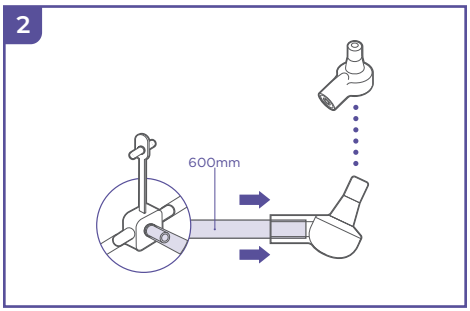

Secure other end of 600 mm tubing firmly to the pump connector.

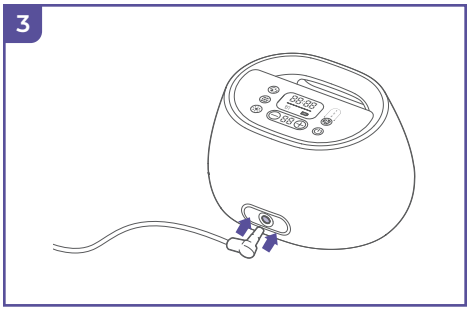

Insert pump connector into opening on left side of pump.

4.3 Connecting for Single Pumping

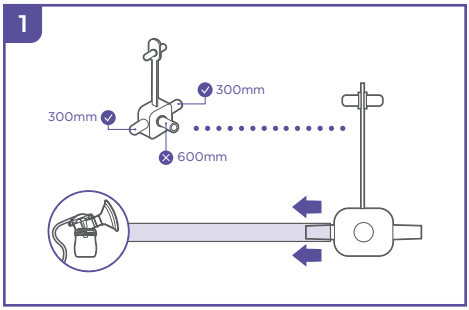

Remove one of the 300 mm tubing from the Tubing Y Connector.

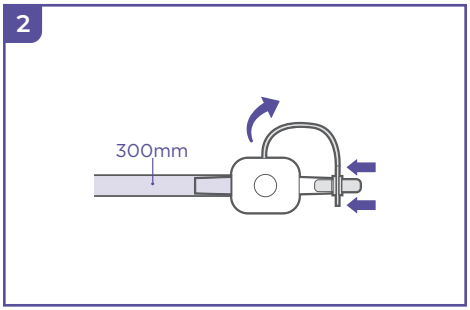

Secure plug into open outlet of Tubing Y Connector.

4.4 Adding Silicone Flange Inserts

Each NaturalWave® Pump includes a 25mm ComfortFit® breast flange with compatible 21mm, 19mm, and 17mm silicone flange inserts. The 25mm breast flange may be used on its own or with the silicone flange inserts to find the right fit. If your flange size is 21mm, 19mm, or 17mm simply insert the corresponding silicone flange insert into the 25mm flange until it is securely seated. To remove the silicone flange insert, gently lift the edge of the insert and pull it out from the breast flange.

5. Using the Lansinoh® NaturalWave® Double Electric Breast Pump

5.1 2-Phase Technology

Using Let-Down and Expression Phases

1. Press and hold the On/Off button to turn the pump on. The NaturalWave® Pump will start in the let-down phase.
2. After two minutes, the let-down phase will automatically change to the expression phase in pumping style 2.
3. If you prefer to bypass the pre-set two minute let-down phase or your milk lets-down sooner than two minutes, press the Expression Phase and Pumping Style button to move to the expression phase.
4. The Expression Phase and Pumping Style button will light up which style you are in: 1, 2, or 3

5.2 Customization for Comfort and Efficiency

Using Customizable Pumping Styles

Choose your style

Each baby is unique – right down to the ways they feed. The Lansinoh® NaturalWave® Pump offers three different pumping styles to choose from – so you can select the style that best simulates your baby's feeding style.

Pumping Style 1	
Pumping Style 2	
Pumping Style 3	

1. With the pump in expression phase, select the style that is most comfortable for you by pressing the Expression Phase and Pumping Style button.
2. Pressing the button again will select the next style. The Expression Phase and Pumping Style will show if you are in style 1, 2, or 3.

You may find that the best style for you changes over time. The customization features of the NaturalWave® Pump allow you to adjust with you and your baby.

Tailor for comfort

Within each pumping style, there are 12 levels of suction to choose from:

1. Adjust for higher suction by pressing the ⊕ suction level increase control button.
2. Adjust for lower suction by pressing the ⊖ suction level decrease control button.
3. The suction level display will show which level you are pumping on from 1 – 12.

NOTE: If at any time the suction on your breast reaches uncomfortable levels, reduce the suction level or disconnect the tubing from its receptacle on the electric pump.

NaturalWave® Technology
You can use NaturalWave® Technology any time you are pumping on the let-down or expression phase and at any suction level.

NaturalWave® Technology mimics the rapid fluttering movements a baby's tongue makes at the end of each suckle while breastfeeding. The lifelike feeling increases comfort while pumping while helping to stimulate more let-downs.

To use NaturalWave® Technology:

1. Press the NaturalWave® Technology button
2. You can adjust your suction level with the + or − buttons
3. When returning to another pumping phase, the NaturalWave® Pump will return to the pumping suction level you were previously using.

NaturalWave® Pump memory function
When switching between any pumping phase on the NaturalWave® Pump, it will remember your previously used suction level and gradually build back to it. The NaturalWave® Pump will maintain the same suction strength when switching between let-down, expression, or NaturalWave® Technology phases but then return to the same suction level you previously used on that phase. The suction level will flash until the correct vacuum is reached.

5.3 Night Light

There are 2 levels of brightness you can adjust on the NaturalWave® Pump to help you see better in darker environments.

1. Press the Night light button to turn it on
2. Press it again to toggle through the 2 brightness levels

5.4 Completing Your Pumping Session

1. When a pumping session is finished, turn the pump off with the on/off button.
2. Make sure there is no suction on the nipple(s) before removing the breast flanges from the breast. If necessary, break the suction by inserting a finger between the breast flange and the breast. Once the suction is broken, the breast flange can be removed safely.
3. The NaturalWave® Pump will remember your last settings in the expression phase. In your next pumping session, the NaturalWave® Pump will start in let-down phase and after 2 minutes switch to expression phase with the last pumping style and suction level you used.

PLEASE NOTE: If the NaturalWave® pump is left on and unattended for more than 60 minutes, it will automatically power off. To turn the pump back on, hold the On/Off button for several seconds.

NOTE: Pump Usage: The pump and accessories are ready for immediate use after normal storage.

6. Troubleshooting

Troubleshooting the NaturalWave® Double Electric Breast Pump

Decreased Suction

If it feels like the suction has decreased, try the following:

- Remove the tubing from pump and place a finger over the tubing connector.
- If you feel suction, the pump is operating properly, but the breastmilk expression set may not be correctly assembled or the white valve may be damaged.
- Make sure the breastmilk expression set has been properly assembled. Check the assembly information in the section "Assembling the Breastmilk Expression Set," pages 11-12.
- Inspect the white valve for a tear or pinhole. This component is critical to achieving proper suction. Replace the white valve with one of the spare valves provided with the product.
- If no suction is felt on your finger, try unplugging the adapter from the electrical outlet, wait a few seconds, and plug it back into the electrical outlet.
- When single pumping, check the tubing connector on the front of the pump to make sure it is closed for single pumping. If open, close the connector.
- If double pumping, ensure that the breastmilk expression set is on both breasts before starting the pump.

Pump Won't Power On

If pumping using the rechargeable battery, check the rechargeable battery power indicator on the display that there is power left. Recharge following the instructions on page 4 "Charging the Battery for Cord-Free Pumping"

Locate the power switch on the bottom of the NaturalWave® Pump and check it is in the On position. Once it is switched On, it can be left On and does not need to switched Off.

7. Breastmilk Storage Guidelines

Breastmilk Storage and Thawing Guidelines for Full-term Healthy Babies

Check with your healthcare provider or an International Board Certified Lactation Consultant for specific storage instructions. When freezing, store in the back of the freezer and do not store milk in the door as temperature can fluctuate as the door is opened and closed.

Guide to storing fresh breastmilk for use with healthy, full-term babies

PLACE	TEMPERATURE	HOW LONG	THINGS TO KNOW
Countertop, table	Room temperature (up to 77°F / 25°C)	Up to 4 hours	Containers should be covered and kept as cool as possible. Covering the container with a clean cool towel may keep milk cooler. Throw out any leftover milk within 2 hours after the baby is finished feeding.
Refrigerator	40°F / 4.0°C	Up to 4 days	Store milk in the back of the refrigerator. When at work, it's OK to put breastmilk in a shared refrigerator. Be sure to label the container clearly.
Freezer	0°F / -18°C or colder	Within 6 months is best. Up to 12 months is acceptable	Store milk toward the back of the freezer where the temperature is most constant. Milk stored at 0°F or colder is safe for longer durations, but the quality of the milk might not be as high.

Source: Adapted from 7th Edition American Academy of Pediatrics (AAP) Pediatric Nutrition Handbook (2014); 2nd Edition AAP/American College of Obstetricians and Gynecologists (ACOG) Breastfeeding Handbook for Physicians (2014); Academy of Breastfeeding Medicine (ABM) Clinical Protocol #8 Human Milk Storage Information for Home Use for Full-Term Infants (2017); CDC Human Milk Storage Guidelines (2024).

Date all breastmilk and use the oldest breastmilk first.

NOTE: DO NOT refreeze milk once it is thawed.

NOTE: DO NOT thaw breastmilk in hot or boiling water.

NOTE: DO NOT MICROWAVE HUMAN MILK! Microwaving alters the composition of the milk. Microwaving may also create “hot spots” in the milk that could burn the infant.

8. Technical Data

1. Power Supply

Battery operation: Li-on battery Li Ion Rechargeable Battery. 7.4V, 1500mAh

Battery operating time: Maximum 200 minutes. Results are dependent on pump settings.

Pump power dissipation: 10.0 Watts maximum

Voltage regulation: Linear voltage regulator with low dropout voltage and short circuit protection

Plug and Play: The pump can be operated whilst charging.

2. Control System

Control unit: Microcontroller with integral program memory

Program memory: 32K flash ROM, 1K RAM memory

HMI: Capacitive touch screen.

Single / double control: Single or double breast pumping possible

Selectable pumping rhythm mode: 3 pumping rhythm modes are selectable and controlled from touchscreen

Adjustable suction level: 12 suction levels are selectable and controlled from touchscreen

Suction Levels Let-down/Stimulation: 39 - 156
Cycles per Second: 2.762 - 1.695

Suction Levels Expression: 83 - 280
Cycles per Second: 1.894 - 0.601

Suction Levels NaturalWave Mode: 110 - 245
Cycles per Second: 1.099 - 0.617

3. Power Requirements

USB A to C cable included. Use 5V 2A USB-C UL or similar accredited charging adapter for optimum charging perfromance. The expected use-life of the pump and accessories is 500 hours.

SYMBOLS	MEANING OF THE SYMBOLS
	Follow instructions for use
	Identifies the manufacturer
	Indicates the date of manufacture
	Type BF applied part
	Class II equipment

SYMBOLS	MEANING OF THE SYMBOLS
	Keep the device dry
	Keep the device away from sunlight
95°F / 35°C 41°F / 5°C Transport/ Storage; 95°F / 35°C 41°F / 5°C Operation	Indicates the temperature limitation for operation, transport and storage.
95% 20% Transport/ Storage; 80% 20% Operation	Indicates the humidity limitation for operation, transport and storage.
106 70 kPa	Indicates the atmospheric pressure limitation for operation, transport and storage.
IP22	Indicates the protection against ingress of solid foreign objects and against harmful effects due to the ingress of water
	This pump is made of various metal and plastics. Before disposal, the device is to be rendered unusable and it must be disposed of as sorted waste in accordance with local waste electrical and electronic equipment regulations. To avoid the harmful effects on the environment and public health align with your defined local return and collection rules for waste electrical and electronic equipment (incl. batteries).
FC	Indicates the compliance with Federal Communications Commission requirements.
	Indicates that the packaging contains products intended to come in contact with food.
	Indicates to handle the fragile device with care.
	Indicates that a specific separate power adapter is required for connecting the device to the supply mains and specifies its model/type.
	Keep out of reach of children
	Do not use metal tools to touch or open battery
TÜV Rheinland C US	TUV Symbol
20 PAP	Number 20 inside the universal recycling symbol represents items made of cardboard. Cardboard is recyclable, but not all locales accept it.
REZY 4922	Guarantees that packaging with this symbol is recyclable and will be accepted by cardboard recyclers.
	The “Recognized Component Mark” is a type of quality mark issued by Underwriters Laboratories (UL). It is placed on components which are intended to be part of a UL listed product.

DO NOT use USB-A to C cable if damaged.

WARNING: Children have STRANGLED in cords. Keep the cords out of the reach of children.

Lithium Battery

The battery used in the device may present a risk of fire or chemical burns if not used properly. Do not disassemble, heat, incinerate or dispose of battery in fire.

Dispose of battery in accordance with local, state, and federal regulations.

RECHARGEABLE BATTERY: 7.4V, 1500MAH, LITHIUM ION	
Battery indicator displayed with 4 bars	Operating time remaining: Approximately 200 minutes
Battery indicator displayed with 1 bar	Operating time remaining: Approximately 60 minutes
Battery indicator red	Operating time remaining: Approximately 30 minutes
Battery indicator flashing	Operating time: Approximately 3-5 minutes

9. Warranty

Limited Consumer Product Warranty (United States)

This product is warranted to the original consumer purchaser (the "purchaser") to be free from defects in material and workmanship which are not commercially acceptable for the period of one year from the date of purchase on the pump mechanism and the period of 90 days on all other product components. Warranty coverage terminates if you sell or otherwise transfer this product to another person. This warranty gives you specific legal rights and you may also have other rights, which vary, by location.

LANSINOH® MAKES NO EXPRESS WARRANTY OF ANY KIND REGARDING THE PRODUCT OTHER THAN THOSE WARRANTIES EXPLICITLY SET FORTH HEREIN. ANY IMPLIED WARRANTY, INCLUDING ANY IMPLIED WARRANTY OF MERCHANTABILITY OR ANY IMPLIED WARRANTY OF FITNESS FOR A PARTICULAR PURPOSE, TO THE EXTENT PERMITTED BY LAW, SHALL BE LIMITED IN DURATION TO A PERIOD OF 90 DAYS FROM THE DATE OF PURCHASE BY THE ORIGINAL PURCHASER.

In the event the product is found by Lansinoh® to not meet the above limited warranty, as purchaser's sole and exclusive remedy Lansinoh® will repair or, at the option of Lansinoh®, replace this product without charge for such replacement or parts or labor.

NOTE: The purchaser shall bear all expense for returning this product to Lansinoh®. This warranty does not apply to any product that has been subjected to misuse, abuse, or alteration.

Only Lansinoh® brand replacement parts are recommended for use with Lansinoh® breastfeeding products. Improper or incorrectly performed maintenance or repair, or use of non-Lansinoh® brand replacement parts may invalidate this warranty.

TO THE EXTENT PERMITTED BY LAW, LANSINOH® SHALL NOT BE LIABLE FOR ANY INCIDENTAL OR CONSEQUENTIAL DAMAGES INCLUDING, BUT NOT LIMITED TO, REPLACEMENT COSTS RESULTING FROM THE BREACH OF ANY WRITTEN OR IMPLIED WARRANTY.

If you wish to make a claim under this warranty, you must return the product to Lansinoh Laboratories Inc., prepaid, together with your dated bill of sale or other dated proof of purchase and a brief statement of the problem, along with a Replacement Authorization (RA) number. You may obtain the appropriate Replacement Authorization number and shipping address by calling the phone number or sending an email to the email address provided below.

Items returned without an associated Replacement Authorization Number will be returned to sender.

To obtain the address to Return Goods or a Replacement Authorization Number: **800-292-4794** or **customerservice@lansinoh.com**

Submit warranty card online at **Lansinoh.com/warranty**

10. Declaration for Electromagnetic Compatibility (EMC)

10.1 For Information Use Only

Medical electrical equipment. This table is referenced from Table 9 of IEC 60601-1-2 General requirements for basic safety and essential performance. Collateral Standard: Electromagnetic disturbances - Requirements and tests

Guidance and Manufacturer's Declaration – Electromagnetic Emissions		
The device is intended for use in the electromagnetic environment specified below. The customer or the user of the device should assure that it is used in such an environment.		
Emissions Tests	**Compliance**	**Electromagnetic Environment - Guidance**
RF emissions CISPR 11	Group 1	The device use RF energy only for its internal function. Therefore, its RF emissions are very low and are not likely to cause any interference in nearby electronic equipment.
RF emissions CISPR 11	Class B	The device is suitable for use in all establishments including domestic when using a 5V 2A USB-C UL or similar accredited charging adapter (isolated, low-noise adapter).
Harmonic emissions IEC 61000-3-2	Class B	
Voltage fluctuations/ flicker emissions IEC 61000-3-3	Complies	

Guidance and Manufacturer's Declaratlon – Electromagnetic Immunity			
The Depth Electrode is intended for use in the electromagnetic environment specified below. The customer or the user of the Depth Electrode should assure that it is used in such an environment.			
Immunity Test	**Test Level**	**Compliance Level**	**Electromagnetlc Environment - Guidance**
Electrostatic discharge (ESD) IEC 61000-4-2	±8 kV contact ±2 kV, ±4kV, ±8 kV, ±15 kV air	±8 kV contact ±2 kV, ±4kV, ±8 kV, ±15 kV air	Floors should be wood, concrete or ceramic tile. If floors are covered with synthetic material, the relative humidity should be at least 30 %.
Electrical fast transient/burst IEC 61000-4-4	±2 kV for power supply lines ±1 kV for input/output lines	±2 kV for power supply lines ±1 kV for input/output lines	Mains power quality should be that of a typical domestic, commercial or hospital environment.
Surge IEC 61000-4-5	± 0.5 kV, ± 1 kV line(s) to line(s) ± 0.5 kV, ± 1 kV, ± 2 kV line(s) to earth	± 0.5 kV, ± 1 kV line(s) to line(s) ± 0.5 kV, ± 1 kV, ± 2 kV line(s) to earth	Mains power quality should be that of a typical domestic, commercial or hospital environment.
Voltage dips, short interruptions and voltage variations on power supply input lines IEC 61000-4-11	0 % U_T; 0.5 cycle at 0°,45°,90°, 135°, 180°, 225°, 270°, 315° 0 % U_T; 1 cycle 70 % U_T; 25/30 cycle 0% U_T; 250/300 cycle	0 % U_T; 0.5 cycle at 0°,45°,90°, 135°, 180°, 225°, 270°, 315° 0 % U_T; 1 cycle 70 % U_T; 25/30 cycle 0% U_T; 250/300 cycle	Mains power quality should be that of a typical domestic, commercial or hospital environment.
Power frequency magnetic field IEC 61000-4-8	30 A/m 50Hz/60Hz	30 A/m 50Hz/60Hz	Mains power quality should be that of a typical domestic, commercial or hospital environment.
Conduced RF IEC61000-4-6	3 V r.m.s. 150 kHz to 80 MHz 6 V RMS in the ISM and amateur bands between 0.15 MHz and 80 MHz	3 V r.m.s. 150 kHz to 80 MHz 6 V RMS in the ISM and amateur bands between 0.15 MHz and 80 MHz	Portable RF communications equipment (including peripherals such as antenna cables and external antennas) should be used no closer than 12 in (30 cm) to any part of the equipment, including cables. Dwell time minimum 3 s.
Radiated RF IEC61000-4-3	10 V/m 80 MHz – 2,7 GHz 80 % AM at 1 kHz	10 V/m 80 MHz – 2,7 GHz 80 % AM at 1 kHz	

Guidance and Manufacturer's Declaration – Immunity to Proximity Fields from RF Wireless Communications Equipment				
This electric breast pump is intended for use in electromagnetic environment in which radiated RF disturbances are controlled. The customer or the user of the electric breast pump can help prevent electromagnetic interference by maintaining a minimum distance between portable and mobile RF communications equipment (transmitters) and the electric breast pump as recommended below, according to the maximum output power of the communications equipment.				
Immunity test	**IEC60601 test level**			**Compliance level**
	Test frequency	**Modulation**	**Immunity level**	
Radiated RF IEC61000-4-3	385 MHz	**Pulse Modulation: 18Hz	27 V/m	27 V/m
	450 MHz	*FM + 5Hzdeviation: 1kHz sine	28 V/m	28 V/m
	710 MHz 745 MHz 780 MHz	**Pulse Modulation: 217Hz	9 V/m	9 V/m
	810 MHz 870 MHz 930 MHz	**Pulse Modulation: 18Hz	28 V/m	28 V/m
	1720 MHz 1845 MHz 1970 MHz	**Pulse Modulation: 217Hz	28 V/m	28 V/m
	2450 MHz	**Pulse Modulation: 217Hz	28 V/m	28 V/m
	5240 MHz 5500 MHz 5785 MHz	**Pulse Modulation: 217Hz	9 V/m	9 V/m
Dwell time minimum 3 s. **Note *** - As an alternative to FM modulation, 50 % pulse modulation at 18 Hz may be used because while it does not represent actual modulation, it would be worst case. **Note**** - The carrier shall be modulated using a 50 % duty cycle square wave signal.				

Guidance and Manufacturer's Declaration – Immunity to Proximity Magnetic Fields in the Frequency Range 9 kHz to 13,56 MHz				
Immunity test	IEC60601 test level			Compliance level(A/m)
	Test frequency	Modulation	Immunity test level (A/m)	
Proximity magnetic fields IEC 61000-4-39	30 kHz [a]	CW	8	8
	134,2 kHz	Pulse modulation [b] 2,1 kHz	65 [c]	65
	13,56 MHz	Pulse modulation [b] 50 kHz	7,5 [c]	7,5
a) This test is applicable only to ME EQUIPMENT and ME SYSTEMS intended for use in the HOME HEALTHCARE ENVIRONMENT. b) The carrier shall be modulated using a 50 % duty cycle square wave signal. c) r.m.s., before modulation is applied.				

10.2 FCC Statement

This device complies with part 15 of the FCC rules. Operation is subject to the following two conditions: (1) This device may not cause harmful interference, and (2) this device must accept any interference received, including interference that may cause undesired operation.

10.3 Wireless Statement

Wireless communications equipment such as wireless home network devices, mobile phones, cordless telephones and their base stations, walkie-talkies can affect this equipment and should be kept at least a distance of 3.5m away from the equipment.

10.4 Stacking

This device should not be used adjacent to or stacked with other equipment. And if adjacent or stacked use is necessary, this device should be observed to verify normal operation in the configuration in which it will be used.

10.5 Disposal

The symbol which can be found on the product or on the package surface indicates that the product mustn't be disposed with other household wastes.

Waste equipment disposal by handing it over predetermined collection point for recycling is solely users' responsibility. Seperate collection of the waste equipment and recycling them properly will preserve the natural resources, have a positive affect on the environment and will protect human health. For further information about the recycling collection points, please contact your local authority or place you purchased the product.

Serious events experienced from using this product should be reported immediately to Lansinoh Laboratories and to the local competent Authority.

This product is a personal care product and therefore cannot be returned once opened. If you experience any problems with this product, please telephone our free customer service line at **800-292-4794** or email **customerservice@lansinoh.com**.

Manufacturer: Lansinoh® Laboratories Saglik Gerecleri Tasarim San. Tic. Ltd. Sti.
Zafer SB Mah. Gunduz Sk. No:13 E.S.B Gaziemir/ Izmir/ Türkiye

Distributed by:
Lansinoh Laboratories, Inc, Alexandria, VA 22314 USA, +1 800-292-4794 | Lansinoh.com

Lansinoh® is a registered trademark of Lansinoh Laboratories, Inc.
© 2025 Lansinoh Laboratories, Inc. All rights reserved. Printed in Türkiye

DE54350IF1025 v3 Date of Issue of the Instructions for Use: 2025-10-03-v3

FSC
www.fsc.org
FPO
to be added by printer